THE EFFECT OF WORK DISCIPLINE AND ORGANIZATIONAL CULTURE ON EMPLOYEE PERFORMANCE IN TYPE D GENERAL HOSPITALS IN DKI JAKARTA (Study at Type D General Hospital in East Jakarta)

Ign. A. Wirawan Nugrohadi[1*], Nurminingsih[2], Pujiwati[3]

[1,2,3]Universitas Respati Indonesia

***corresponding author : ignatiuslegioner@gmail.com**

Abstract

This study aims to determine whether there is an influence between work discipline on employee performance, is there an influence between organizational culture on employee performance and to find out whether there is an influence between work discipline and organizational culture together on employee performance at Type D General Hospital Jakarta East. This research method is quantitative with a two-step approach and uses analysis of Structural Equation Modeling (SEM) methodology. The population in this study were all leaders and employees of the Type D General Hospital in DKI Jakarta, which numbered 19 Type D General Hospitals as many as 2645 people and 248 samples were calculated with Slovin sample formula. The results of the study concluded that work discipline had a significant positive effect on employee performance, organizational culture had a significant positive effect on employee performance, work discipline and organizational culture had a significant positive effect on employee performance at Type D General Hospital in East Jakarta

Keywords: work discipline, organizatioal culture, job performance, hospital, structural equation modeling

1. INTRODUCTION

Today's customers always want fast access to high-quality products and services at reasonable prices. Therefore managers are challenged to accelerate the creation of high-quality products and services with prices, and delivery cycles simultaneously, reduce costs, and improve quality. The success or failure of an organization in achieving its objectives depends on the quality of human resources that manage the organization without ignoring the other supporting factors, which are interrelated. Even in modern times human resources are no longer considered as tools to achieve organizational goals but have a strategic position as an asset of the organization.

The Hospital Organization currently not only provides services that are social in nature, but serves the needs of medicines for the needs of patients. Therefore, in each hospital it is always helping the provision of medicines through the pharmacy where it is located in the hospital. Likewise, the condition of the Sub-District Health Center in the East Jakarta region consisting of 15 service units whose status has been upgraded has been upgraded to type D hospitals and 4 District Health Centers in 2016 has been upgraded to type D hospitals, according to DKI Jakarta Governor Decree No. 1024 of 2014 dated June 17, 2014. Hospital type D is a hospital that only provides general health, dental services and receives referrals from the District Health Center. But until now residents still experience obstacles because they do not understand the mechanism of services and facilities and the number of employees in type D hospitals is indeed inadequate.

The service aspect of type D hospitals still does not meet the standard of having 50 TT hospitalizations but in reality is still below standard and has 4 specialists namely Obgyn, Surgery, Children and Internal Medicine but there are still many type D hospitals that are not

complete due to the difficulty of finding specialist doctors certain. The number of human resources in type D hospitals in DKI Jakarta in 2015 was 1,927 people (15 hospitals) and in 2016 as many as 2,645 people (19 hospitals) but the authors took samples of type D hospitals in the East Jakarta Region on the grounds that the geographic location was very strategic close to campus and very crowded. There are many possibilities for complex health problems so that the number of patients who are treated more automatically and the workload of RSUD type D staff can be measured by the small number of patients who come in terms of health services, with 251 in 2015 and 404 in 2016. It turned out that many of the employees violated the rules of employee discipline, among others, coming late / returning quickly as much as 91,929 minutes in 2015 and 105,600 minutes in 2016 Ill 159 people in 2015 and 268 in 2016 138 people in 2015 and 107 in 2016 Alpa 12 people in 2015 and 9 in 2016. With the decline in employee work discipline is likely to have a large effect on the decline in hospital revenue. Thus the work discipline and work culture of two components cannot be separated because the two components if implemented properly will be able to have an influence on the revenue of the RSUD. Therefore to anticipate it, management must be able to increase work productivity in order to achieve the goals of the organization.

Sinambela (2000; 287) and Siswanto provide an understanding of work discipline is the awareness and willingness of someone to carry out the task and responsibility. Organizational culture is a system of shared meanings shared by members who distinguish the organization from other organizations. This does not conflict with the opinion of Robbin (2001; 247) and Toha (2001; 247), giving an explanation that organizational culture as values must be guided by human resources both individually and in groups. RSUD type D views that organizational culture is formed beginning with a process that will ultimately lead to the initial goal, namely they have a vision (vision) about how the organization should be and they are not hampered by habit or previous ideology.

In the end, through the establishment of a strong organizational culture, it is hoped that it will have a positive impact on the performance of employees in carrying out their duties and responsibilities because they are selected through a series of behavioral and consistency values embedded in the organization's vision and mission. The study then identifies relationships (both correlational and predictive) between organizational culture and employee / employee performance. Conditions that occur in the field obtained through field observations are; The problem of employee attendance level that should be 7.30 has reached 100% of the number of employees, but the reality up to 8:00 has not yet reached 100%, in his office each of them is still a lot empty, in terms of using staffing attributes also experience the same thing, in the management of official documents is far from what is expected, the work environment, especially in the patient queue room, in the cleanliness of the work environment still seems to have not been arranged neatly. Thus the condition of document management is still far from what is expected, the work environment, especially in the queue of patients, in managing the work environment still seems chaotic. Another condition that is very concerning cannot be ignored is the problem of medical experts, specialist doctors whose numbers are still very limited. If this is allowed, then the quality of service to the community is still far from the expected satisfaction. Such conditions are likely to have an adverse effect on the performance of the Hospital.

From the observations obtained data that the level of attendance of employees in a certain period shows that employee performance evaluation in 2016 in East Jakarta shows that the percentage of achievement in the category of (good) is still low which shows the figure only reaches 24.50% per year, category (less) an average of 4.70% per year. category (very less) 0.49% and the rest with the category of work performance (average / standard) reaching 70.29% per year,

the data shows that the employee's desire is not strong enough to improve his performance in the good category or even if possible.

RSUD type D, considers that the application of correct and periodic performance appraisal as a pattern of improving the quality of individual work for all employees will be able to build work discipline and develop good values through organizational culture so that the person (employee / employee) in the type of hospital RSUD D as an overall important asset of a hospital that is responsible for the long-term, mid-term and long-term hospital survival. So based on the background that has been parsed, this study aims to collect and process data to find out work discipline, organizational culture and situations that support it so that the quality of the research

becomes more valid, then describes and performs analysis and tests to identify factors or characteristics and dimensions that affect work discipline and organizational culture on the performance of employees / employees in type D hospitals.

2. THEORETICAL BASIS AND METHODS

Work Discipline

Work discipline has an important meaning for the workplace organization with the existence of work discipline on every employee in the workplace organization that will make the organization progress, because disciplined employees in doing work can complete existing tasks within the workplace organization environment. even though it does not overall produce a perfect job. But in a certain period of time the employee will do the job for the better. According to Hasibuan (2001: 193) discipline is the awareness and willingness of someone to obey all organizational rules and prevailing social norms. Awareness is the attitude of someone who voluntarily obeys all regulations and is aware of their duties and responsibilities, so that someone will obey / do all their tasks properly not on compulsion. Willingness is one attitude, behavior and actions of someone who is in accordance with organizational regulations, both written and unwritten, so that someone will be willing to comply with all regulations and carry out their duties, both voluntarily and forcibly.

Understanding of work discipline put forward by experts, Keith Davis (1985: 366) quoted by Mangkunegara (2001: 129) suggests that "Dicipline is management action to enforce organization standards". Work discipline can be interpreted as "implementation of management to strengthen organizational guidelines." Simamora (2004: 610) that "Discipline (Discipline) is a procedure that corrects or punishes subordinates for violating rules or procedures." Work discipline according to Rivai (2008: 444) is: "A tool used by managers to communicate with employees so that they are willing to change a behavior and as an effort to increase one's awareness and willingness to comply with all applicable company regulations and social norms".

Every manager must be able to ensure that employees are orderly in their duties, in the context of the discipline of meaning justice must be treated consistently. If the employee faces the challenge of disciplinary action, the employer must be able to prove that the employee involved in the behavior is not worthy of punishment. To manage discipline there is a need for standards of work discipline that are used to determine employees are treated fairly. Measuring instruments for employee work discipline can be done by measuring interpersonal communication, namely the form of filling for respondents and for managing training.

Organizational Culture

Edward Burnett Taylor in Ndraha (1997: 43) states that the culture of civilization, taken in a wide-ranging sense, is a complex whole that includes knowledge, belief, art, morals, law, custom, and any other capabilities and habits acquired by man. as member of society. (Culture or

culture is a complexity that includes knowledge, beliefs, arts, morals, laws, customs, and other abilities and habits acquired by humans as members of society). Whereas Junus Melalatoa in Toha (2002: 24) states that cultural systems are: "A set of knowledge which includes life views, beliefs, values, norms, rules, laws, which belong to a society through a learning process, which is then driven to organize, assess and interpret a number of objects and events in various aspects of life in the community concerned. "

According to Edgar H. Schein in Ndraha (1997: 43), states that organizational culture is "Apattern of shared basic assumptions that the group learns as it solved its problems of externaadaptation and internal integration, that has worked well enough to be considered valid and, therefore, to be taught to new members as to believe, think, and feel it relation to these problems(Patterns of basic assumptions that are formed, discovered, or developed by a group in theprocess of overcoming problems of external adaptation, as well as internal integration that havworked quite well, so that they are considered quite valuable and are therefore taught to newmembers as the right way in look, think and feel about the problems it faces).

Based on the definition of experts mentioned above, the authors argue that there are severalelements that exist in the definition of organizational culture, which starts from the perception of members of the organization; This shared perception is the process of overcoming problemsarising from the external environment, the mutually agreed value is the correct way of looking at, thinking and feeling about the problems facing the organization.

Employee Performance

Factors that influence the performance of individual workers include, skills, motivation, work discipline, the existence of jobs they do, rewards or incentives, their relationship with the organization and many other factors. Organization or company, its performance depends more on the performance of individual workers. There are many ways to think about the type of performance needed by the workforce for a company so that it can be successful including considering three elements, namely productivity, quality and service.

According to Mangkunegara (2001: 67) Performance is the result of work in quality andquantity achieved by an employee in carrying out his duties in accordance with theresponsibilities given to him. According to Mahsum (2006: 25) performance (performance) is'An overview of the level of achievement of an activity / program / policy in realizing the goals,objectives, mission and vision of the organization contained in the strategic planning of anorganization'. According to Rivai (2008: 309) states that. "Performance is a function ofmotivation and ability. To complete a task or work someone should have a certain degree ofwillingness and level of ability. Employee performance is a very important thing in theorganization's efforts to achieve its goals. According to Wirawan (2009: 5) Performance isdefined as "Output produced by the functions or indicators of a job or a profession in a certaintime".

Based on the opinion above, it can be concluded that the notion of performance is the result of work achieved by an employee towards the implementation of work assignments which are judged based on certain criteria or standards of assessment.

Effect of Work Discipline and Organizational Culture on Employee Performance

Work Discipline is an important work thing to be maintained because with discipline enforced, then employees can do their work in accordance with established procedures and rules so that they can achieve optimal results. Good discipline from employees will show that a company can maintain and maintain the loyalty and quality of its employees. In addition, by

knowing the work discipline of the employees, the performance values of the employees will be known. This is because work discipline and employee performance have connectivity, according to Leiden's explanation (2001: 63) arguing that; "By enforcing discipline, it can overcome poor performance problems and strengthen the influence of employee work behavior in groups or organizations. If discipline can be carried out properly and does not delay the time, the performance problems are not allowed to become severe, and the possibility of problems that occur can be dealt with appropriately and easily ".

Discipline can also be used to overcome unexpected employee behavior, considering that each company has rules that must be adhered to by its employees. The attitude of employees who are obedient and obedient to the rules is very influential on company performance and discipline is an important part of this attitude. As explained by "Trahan and Steiner (1998: 129) suggest"Work discipline is positively associated with employee performance, because with discipline the leader can implement an action so that the specified work standards can be obeyed by employees ".

Explanation from some experts above can be concluded that employee work discipline can affect employee performance because by having a high work discipline, an employee will carry out the task or work in an orderly and smooth manner so that the results of his work (performance) will increase and will also affect the company's goals which can be achieved optimally.

Research Methods

This research includes quantitative research methods that try to explain the condition of each variable in detail and see the relationship or relationship between these variables. This study aims to determine the magnitude of the effect of independent variables on the dependent variables both partially and jointly. The object of this study consisted of three variables, namely two independent variables namely Work Discipline (X1), Organizational Culture (X2), and Employee Performance (Y). The population in this study were all leaders and employees of the DKI Jakarta Type D General Hospital, totaling 19 Type D General Hospitals totaling 2645 people. However, in this study used samples calculated based on Slovin sample formula which amounted to 348 respondents.

So based on the explanation of the operational variables above, a research model is formed as shown below:

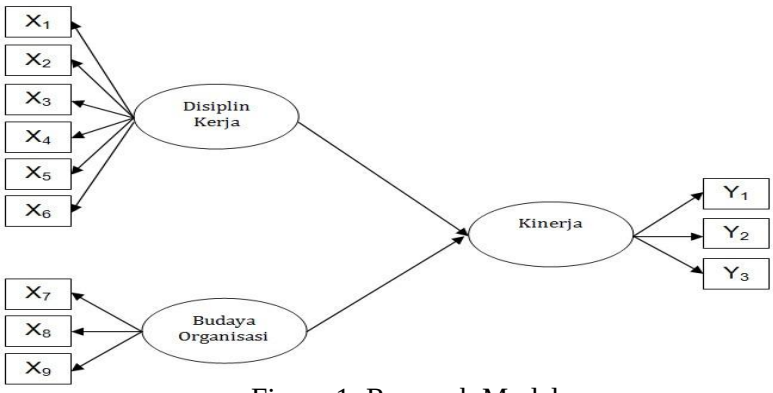

Figure 1: Research Model

The data analysis technique used to discuss the problems in this study is the Structural Equation Model (SEM). Structural Equation Model (SEM) is a statistical technique that allows testing of a series of relations that are relatively complex simultaneously. Complex relationships

can be built between one or several dependent variables with one or several independent variables. There may also be a variable that has a dual role, namely as an independent variable in a relationship, but becomes a dependent variable in another relationship given the existence of a tiered causality relationship.

Each dependent and independent variable can take the form of a factor or construct that is constructed from several indicator variables. Likewise, among these variables can be in the form of a single variable, a single variable that is observed or measured directly in a research process. The results of the analysis are then interpreted and the final steps are summarized and given suggestions.

3. RESULTS AND DISCUSSION

3.1 Respondent Demographic Analysis

In this sub-chapter, an analysis of the demographics of respondents in this study will be explained. This section will explain the demographic conditions of respondents according to Gender, Age, Last Education, and years of work. Based on the demographics of the respondents according to gender, the majority of respondents in this study were female, namely 58.33% and the remaining 41.67% were male sex. Based on the demographics of respondents according to age, the majority of respondents in this study were aged 20-30 years, 74.71%, followed by respondents aged 31-40 years 11.49 %%, respondents aged 41-50 years amounting to 6.03 %, and respondents aged> 50 years are 7.76%.

Based on the demographics of respondents according to the latest education, the majority of respondents in this study were graduated D3 which amounted to 56.32%, then followed by graduating from high school by 25.29%, graduating S1 at 13.79%, and graduating S2 at 4.60%. Based on the demographics of respondents according to the period of work, the majority of respondents in this study were having a 1-2 year service period of 74.43%, then followed by respondents with a tenure of> 10 years, 14.65%, respondents with 2.1 years of service -5 years 7.76%, and only 3.16% of respondents with a working period of 5.1-10 years. Based on the demographics of the respondents according to employment status, the majority of respondents in this study were contracted, amounting to 75.29%, and a fixed status of 24.71%.

Table 1 Descriptive Results of Respondent Demographics

Demographic Aspect	Percentage	Demographic Aspect	Percentage
Gender		**Last education**	
Man	41,67%	SMA	25,29%
Women	58,33%	D3	56,32%
Age		S1	13,79%
20-30 years	74,71%	S2	4,60%
31-40 years	11,49%	**Years of Service**	
41-50 years	6,03%	1-2 years	74,43%
>50 years	7,76%	2,1-5 years	7,76%
Employee Status		5,1-10 years	3,16%
Contract	75,29%	> 10 years	14,65%
Pemanent	24,71%		

Source: Processed, 2018

3.2 Results of Structural Equation Modeling (SEM) Analysis

Data processing methods using Structural Equation Modeling (SEM) with well-known software LISREL (Linear Structure Relations) is an integrated approach between factor analysis, structural models and path analysis. In LISREL, three activities can be carried out simultaneously, namely examining the validity and reliability of the instrument, testing the relationship model between latent variables (path analysis), and obtaining a useful model for estimation (equivalent to a structural model or regression analysis).

A variable is reflected by its dimensions, dimensions are said to reflect variables if the value of the standardize loading factor (SLF) is above 0.6. This study uses a Structural Equation Modeling (SEM) data analysis tool to determine the effect of Work Discipline and Organizational Culture variables on Employee Performance in Type D RSUD in DKI Jakarta. This research was conducted by distributing questionnaire instruments to 348 respondents with data analysis using a "two step approach" analysis approach, namely by analyzing the measurement model aimed at evaluating the validity and reliability of the measurement model and then analyzing the structural model (structural model).) aimed at analyzing the relationship between all major research latent variables that make up the research hypotheses.

3.3 Measurement Model

The measurement model is presented by looking at the number t-value and standardized loading factor on each indicator of each research variable. Given the approach taken in this study is a two step approach, it is necessary to analyze the measurement model first to see the validity and reliability of each indicator used in the latent variable. According to Wijanto (2008) indicator validity is measured by knowing the value of t value where required must be above (≥ 1.96), besides that, validity can also be seen through the number of standardized loading factors which are required to be ≥ 0.3. The following are the results of analysis of each indi- cator used in each latent variable:

Latent Work Discipline Variables.

The latent variable Work Discipline has 6 indicators, which include timeliness (X1), speed in carrying out tasks (X2), compliance in the use of working hours (X3), compliance with orders from superiors (X4), success in carrying out tasks according to plan (X5) and the ability to make written reports periodically (X6). Furthermore, the measurement model of the latent variable Work Discipline will be tested for validity and reliability.

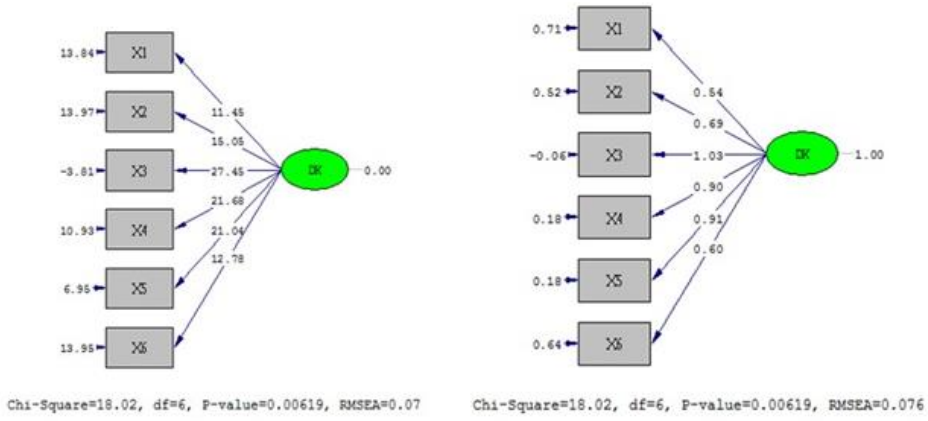

Figure 2: t-value & SLF Measurement Model of Work Discipline Variables

The t-value and SLF results in the Work Discipline variable indicate that the RMSEA value is 0.076 ≤ 0.08 which indicates that the overall model fit (overall model fit) or data match with the model is close fit. The T-value for all indicators has met the requirements of the assumption that is ≥ 1.96 and the standard factor (standardized loading factor / SLF) of the item statement is valid or meets the requirements because the SLF value is ≥ 0.30.

Based on the table above it can be seen that all GOFI values meet good compatibility criteria. The validity of the observed variables of the Work Discipline variable is also good, because all SLF ≥ 0.30 (Wijanto, 2008). The work discipline measurement model has good reliability (CR CR 0.70 and VE ≥ 0.40). Thus it can be concluded in general that the suitability of the overall model for the measurement model of the Work Discipline variable is good, as well as its validity and reliability.

Table 2 Test Reliability of Work Discipline

Variabel Laten: Work Discipline					
Indicator	**t-value**	**SLF**	**Error**	**CR**	**VE**
X1 (Timeliness)	11.45	0.54	0.71		
X2 (Speed of Carrying Out Tasks)	16.06	0.69	0.52		
X3 (Compliance with Usage of Working Hours)	27.45	1.03	-0.06	0.9	0.62
X4 (Compliance with the Order of the Boss)	21.68	0.9	0.18		
X5 (Success in carrying out tasks)	21.04	0.91	0.18		
X6 (Ability to report)	12.78	0.6	0.64		
Chi-Square = 18.02, df = 6, p-value=0.00619, RMSEA=0.076					

Source: Processed, 2018

Latent Variables of Organizational Culture

The latent variable Organizational Culture has 3 indicators, which are individual initiatives (X7), tolerance to risk (X8), and direction (X9). Furthermore, the measurement model of the latent variable Organizational Culture will be tested for validity and reliability.

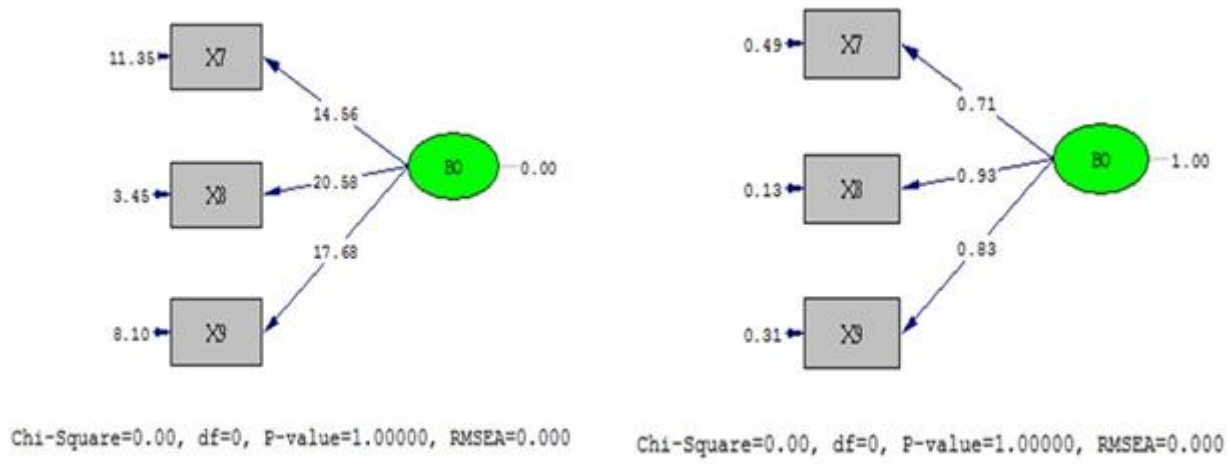

Figure 3: t-value & SLF Model Measurement of Organizational Culture Variables

The t-value and SLF results in the Organizational Culture variable indicate that the RMSEA value is 0,000 ≤ 0.08 which indicates that the overall model fit (overall model fit) or data match with the model is close fit. The T-value for all indicators has met the requirements of the assumption that is ≥ 1.96 and the standard factor (standardized loading factor / SLF) of the item statement is valid or meets the requirements because the SLF value is ≥ 0.30.

Table 3 Reliability Test for Organizational Culture

	Latent Variable: Organizational Culture				
Indicator	**T-value**	**SLF**	**Error**	**CR**	**VE**
X7 (Individual Initiative)	14.56	0.71	0.49	0.867	0.688
X8 (Tolerance Against Risk)	20.58	0.93	0.13		
X9 (direction)	17.68	0.83	0.31		
Chi-Square = 0.02, df = 0, p-value=1.00000, RMSEA=0.000					

Based on the table above it can be seen that all GOFI values meet good compatibility criteria. The validity of the observed variables from the Organizational Culture variable is also good, because all SLF ≥ 0.30 (Wijanto, 2008). The Organizational Culture measurement model has good reliability (CR ≥ 0.70 and VE ≥ 0.40). Thus it can be concluded in general that the suitability of the overall model for the measurement model of the Organizational Culture variable is good, as well as its validity and reliability.

Latent Variables of Employee Performance

The latent variable Employee Performance has 3 indicators, including Leadership (Y1), Skills or Competencies (Y2), and Responsibility (Y3). Furthermore, the measurement model of the latent variable Employee Performance will be tested for validity and reliability.

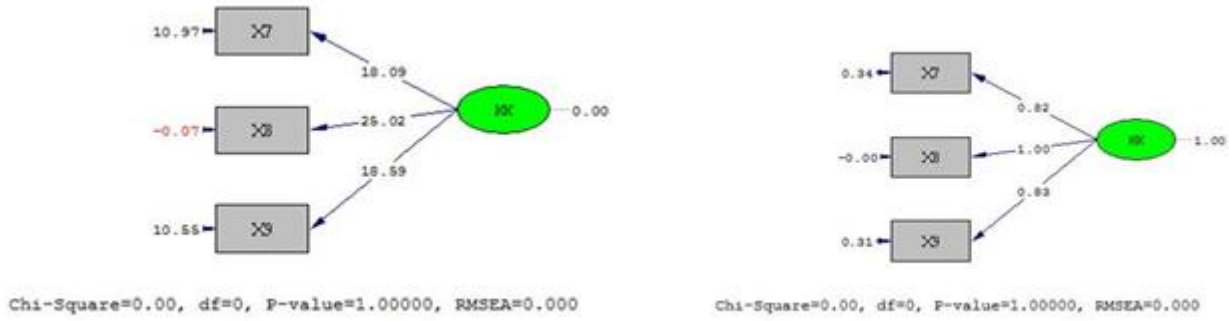

Figure 4: t-value - SLF Measurement Model of Employee Performance Variables

The t-value and SLF results in the Employee Performance variable indicate that the RMSEA value is 0,000 ≤ 0.08 which indicates that the overall model fit (overall model fit) or data match with the model is close fit. The T-value for all indicators has met the requirements of the assumption that is ≥ 1.96 and the standard factor (standardized loading factor / SLF) of the item statement is valid or meets the requirements because the SLF value is ≥ 0.30.

Table 4 Test Reliability of Employee Performance

Latent variable: Employee Performance					
Indicator	**t-value**	**SLF**	**Error**	**CR**	**VE**
Y1 (Leadership)	18.09	0.82	0.34		
Y2 (Skills or Competencies)	25.02	1	0		
Y3 (Responsibility)	10.59	0.83	0.31	0.915	0.784
Chi-Square = 0.00, df = 0, p-value=1.00000, RMSEA=0.000					

Based on the table above it can be seen that all GOFI values meet good compatibility criteria. The validity of the observed variables from the Employee Performance variable is also good, because all SLF ≥ 0.30 (Wijanto, 2008). The Employee Performance measurement model has good reliability (CR ≥ 0.70 and VE ≥ 0.40). Thus it can be concluded in general that the overall suitability of the model for the measurement model of the Employee Performance variable is good, as well as its validity and reliability.

3.4 Structural Model

Structural Model Compatibility Test

SEM analysis uses a "two step approach", therefore after the first step of producing a measurement model from a valid and reliable research model, the second step is carried out by analyzing the structural model. This analysis relates to the testing of research hypotheses that have been mentioned in chapter 3. In the hypothesis test, a research hypothesis is accepted if the absolute number of the value of t ≥ 1.96 with the coefficient sign matches the proposed research hypothesis (positive or negative).

In this research model shows the influence of Work Discipline on Employee Performance (hypothesis 1), and the influence of Organizational Culture on Employee Performance (hypothesis 2). Estimation results from the structural model of the first research model are shown through the following path diagram:

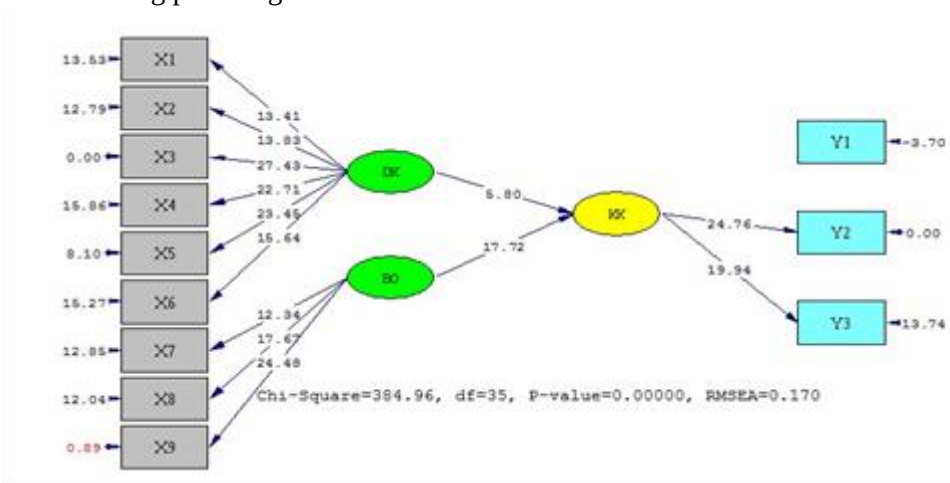

Figure 5: Track Diagram of Research Structural Model (t-value)

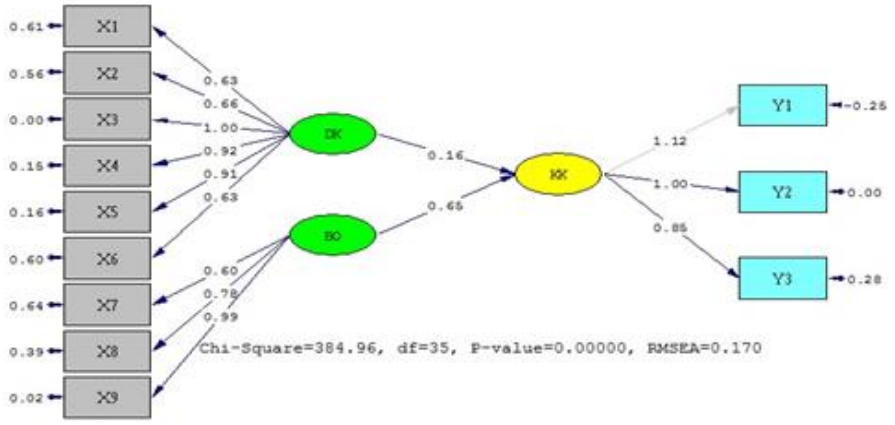

Figure 6: Trajectory Diagram of the Structural Research Model (Standard Solution)

The GOFI value for the structural model of the research model can be seen in the table below:

Table 5 Goodness of Fit Indices (GOFI) Structural Models

GOFI	Results Value Calculate	Values for Model Compatibility	Conclusion
p-value	0.0000	p-value ≥ 0.05	Marginal Fit
RMSEA	0.170	RMSEA ≤ 0.08	Marginal Fit
NFI	0.51	NFI ≥ 0.90	Marginal Fit
NNFI	0.078	NNFI ≥ 0.90	Marginal Fit
CFI	0.51	CFI ≥ 0.90	Marginal Fit
IFI	0.51	IFI ≥ 0.90	Marginal Fit
Standardized RMR	0.11	Standardized RMR ≤0.05	Marginal Fit
GFI	0.84	GFI ≥ 0.90	Marginal Fit

Based on the table above, it can be seen that for the structural model, the standardized value of RMR, p-value, standardized RMR, GFI RMSEA, NFI, NNFI, CFI, and IFI shows that GOFI value is mariginal fit). However, the structural model in this study can still be carried out the next analysis, namely hypothesis analysis. Testing the coefficient of determination in this study can be seen in the following equation: KK = 0.16 * DK + 0.65 * BO, Errorvar = 0.50, R^2 = 0.50

Based on the equation in the model above, it can be concluded that, the ability of work discipline variables and organizational culture variables in explaining variable employee performance is 50%, while the remaining 50% is explained by other variables outside the research model. The overview of the results of the research hypothesis analysis is shown in the table below. Based on the table it can be seen that 2 research hypotheses have a positive and significant effect.

Table 6 Test Results of Significance of the Structural Model of Research

Hypothesis	Hypothesis Statement	SLF	t-value	Description
H1	Discipline has a significant effect on Employee Performance	0.16	5.80	Positive-significant, Data supports the research model
H2	Organizational Culture has a significant effect on Employee Performance an	0.65	17.72	Positive-significant, Data supports the research model

4. CONCLUSION

Based on the results of data analysis that has been done using the Structural Equation Modeling methodology in assessing the influence of variables of Work Discipline and Organizational Culture on Employee Performance, the following two conclusions are obtained:

a. Then it can be concluded that Work Discipline has a positive and significant influence on employee performance. The SLF value shows the number 0.16, which means that if work discipline increases by 1%, it can improve employee performance by 16%. Conversely, if work discipline decreases, it can reduce employee performance. This influence has been tested statistically significant. This means that if work discipline increases by 1%, then employee performance will also experience the same increase. Likewise with the opposite
b. Organizational Culture has a positive and significant effect on Employee Performance. This means that if employees of the Type D Hospital in DKI Jakarta can improve the application of a good organizational culture, then employee performance will also increase. Likewise with the opposite. From the results of the discussion it can be concluded that there is a positive influence between organizational culture variables on employee performance, but this influence is not significant. The SLF value shows the number 0.65, which means that if the organizational culture increases by 1%, it can improve employee performance by 65%.
c. Conversely, if the organizational culture decreases, it can reduce employee performance. This influence has been tested statistically significant.

Based on the results of the above research, the researcher proposes several recommendations to anticipate the shift in the environment which is always rapidly changing, and recommendations include:

a. The existing and applicable level of Work Discipline and Organizational Culture still needs to be improved because the existing conditions of work discipline and organizational culture are still very alarming. To improve employee work discipline can be done through the care of leaders at all levels to often discuss with implementers in exploring various information related to their respective duties. Frequent involvement of staff through discussions is expected to create a dynamic work environment. Whereas for the appropriate organizational culture the results of the research are still not significant
b. Organizational Culture Problems from the results of the study indicate that the level of organizational culture is still not significant with performance because the results are still far below the standard. To improve the organizational culture changes in attitudes and behavior should start from the management level, which is to reduce the time to stay in the workplace, but

can be done through looking directly at the phenomena that occur in the field, then the solution is resolved through discussion. Discussion forums can explore the potential of each staff.

c. To improve insights and knowledge relating to their main tasks and functions, the hospital should routinely hold seminars and better provide opportunities for employees to improve their abilities through formal education levels. With the increase in formal education, it is expected to increase knowledge and knowledge more specifically the increase in Knowledge, Skill and Attitude.

REFERENCES

[1] Hasibuan, M.S.P. (2001). Manajemen Sumber Daya Manusia. Jakarta: Bumi Aksara
[2] Mangkunegara, A.P. (2001). Manajemen Sumber Daya Manusia. Bandung: PT Remaja Rosda Karya
[3] Ndraha, T. (1997). Budaya Organisasi. Jakarta: Rineka Cipta
[4] Rivai, V. (2008). Manajemen Sumber Daya Manusia untuk Perusahaan. Bandung: PT Remaja Rosda Karya
[5] Robbin, S.P. (2001). Perilaku Organisasi: Edisi Bahasa Indonesia, Jilid I dan II. Jakarta: Prenhallindo
[6] Sedarmayanti. (2007). Manajemen Sumber Daya Manusia Reformasi dan Manajemen PNS.Bandung: PT Refika Aditama
[7] Simamora, H. (2004). Manajemen Sumber Daya Manusia, Edisi III. Yogyakarta: STIE YPKN
[8] Sugiyono. (2016). Metodologi Penelitian Administrasi. Bandung: Penerbit Alfabeta
[9] Tika, H.M.P. (2004). Budaya Organisasi dan Peningkatan Kinerja. PT Bumi Aksara
[10] Sutanto, A.B. (1997). Manajemen Persaingan Bisnis I. Jakarta, Alex Media Komputindo
[11] Thoha, M dan Darmawan. (2002). Perilaku Organisasi. Jakarta: Pusat Penerbitan UniversitasTerbuka
[12] Umar, H. (2004). Metodologi Penelitian untuk Skripsi dan Tesis Bisnis. Bandung: Alfabeta
[13] Wirawan. (2009). Evaluasi Kinerja Sumber Daya Manusia Teori, Aplikasi, dan Penelitian.Jakarta: Salemba Empat.
[14] Surat Keputusan Gubernur DKI Jakarta No. 1024 Tahun 2014 Tentang Penetapan Puskesmas Kecamatan Rawat Inap menjadi RSUD tipe D.